Technical information
Explosion drawing and parts list

Mitre saw TM33W/TS33W (Ref. 3300400)
(*) Parts not mounted in the current version

Pos.	Code	Vrs.	Serie	Item
1	3321601			SCREW
2	7178003			SCREW M.5X12 PH.
3	7203047			COVER
4	7226067			SPRING
5	7203061			FIXING ARM
6	3678011			SCREW M.4X20 PH.
7	2085002			HEX. NUT M.6
* 8	3368545	A0	1100361	LR44 BATTERY
8 -	3368370			KIT 3 BATTERIES
9	7203044			FRONT COVER
10	4385013			NUT M.5
11	4371026			HEX. HD. SCREW M.5X25
12	1673018			HEX. SOCKET FLAT HD. SCREW M.6X20
13	7203052			COLLAR
14	1672008			SCREW M.4X10 PH.
15	1685018			SQUARE NUT M.4
16	3319624	A0		LABEL
16 -	3319625	A0		LABEL
16 -	3319654			LABEL
16 -	3319619			LABEL
17	3378015			SCREW M.5X30 PH.
18	1025103			KNOB M 6X43 mm (CG)
19	1426051			SPRING
20	3345137			UPPER PROTECTOR ASS'Y
21	3323159			LOWER PROTECTOR (LEFT)
22	3323158			LOWER PROTECTOR (RIGHT)
23	8070017			PAN HD. TAPPING SCREW 8X1/4 PH.BZ.
24	8082004			LOCKWASHER D.4
25	3322146			ROD
26	1699021			WRENCH 2.5 mm
27	3302830	A0		PROTECTOR
27 -	3302809			BUFFER PROTECTOR
28	3306627			GUIDE PROFILE
29	3306628			REAR PART
30	2904080			REGULATING SHAFT SHEATH
31	3388096			PIN D.5X30
32	3306656	A0		UPPER COVER
32 -	3306629			UPPER GUIDE
33	7088010			RETAINING RING N-5
34	3346449			BUFFER
35	3322155			SHAFT
36	7226068			SPRING
37	3322157			SCREW
38	3345528			PAWL ASS'Y
39	3326080			SPRING
40	4399033			HEXAGON BAR WRENCH 8 mm
41	2024084			SPRING WASHER E=0.4
42	3345135			LEVER ASS'Y
43	3322151			PIN
44	6521048			BOLT
45	1488028			RETAINING RING D.3.2
46	4475023			HEX. SOCKET HD. CAP SCREW M.3X8
47	3326086			SPRING
48	3323146			RIVING KNIFE
49	3306172			SHOE SUPPORT
50	3306636			BASE GUIDE
51	3306638			TABLE
52	3306652			COVER
53	3322150			CENTERING BUSHING
54	3302391			HANDLE
55	7278010			SCREW M.5X15
56	3306135			BEARINGS BOX
57	7283011			WASHER M.42
58	7278006			SCREW M.5X20 PH.
59	4610039			BALL BEARING 6004-2RS
60	7288055			O-RING D.42
61	3306305			FENCE GUIDE
62	3302182			BLADE PROTECTION
62 -	3302670			BLADE PROTECTOR (ORANGE)
63	4388013			RETAINING RING D.50
64	3306133			BLADE FLANGE
65	9040068			CARBIDE SAW BLADE D300 Z48
65 -	9040069			CARBIDE SAW BLADE D300 Z72
* 66	3302391			HANDLE
* 67	2079002			SCREW D.4x16 (TX)
68	4375033			HEX. SOCKET HD. CAP SCREW M.10X25 (LEFT)
69	3326081			SPRING
70	3011008			NEADLE BEARING HK 1210
71	3380038			WASHER D.12.1X20X0.5
72	3319168			LABEL
73	4070011			PAN HD. TAPPING SCREW 10X1 PH.B.
74	3306189			TRANSMISSION COVER
75	3678012			SCREW M.5X40 PH.
76	6478001			SCREW M.4X8 PH.
77	3351120			ARMATURE ASS'Y 230 V.
78	1910002			BALL BEARING 608-ZZ
79	3302245			DEFLECTOR
80	3355117			STATOR ASS'Y 230 V.
81	1970001			PAN HD. TAPPING SCREW 8X1/2 PH.B.
82	4302025			CORD CLAMP
83	3345407			ELECTRONIC CIRCUIT + WIRING ASS'Y
84	3345228			LOWER PROTECTION ASS'Y
85	3302450			DISTRIBUTING BOX
86	8002043			CORD ARMOR
87	4645495			CORD ASS'Y (EUROPE)
88	3345212			PULLEY WITH SHAFT
89	3387081			BELT
90	3387073			PULLEY
91	3387074			PULLEY
92	7226058			SPRING
93	3323201			BRACKET
94	3323200			PAWL
95	3319330			LABEL
96	3302395			BRACKET
97	9510006			BALL BEARING 6001 LLB
98	6070062			SCREW M.8X80
99	9581010			TOOTHED WASHER D.4
100	6018011			BRUSH CAP
101	3317022			CARBON BRUSHES SET
102	3318024			BRASS FOR BRUSH HOLDER
103	3318025			BRUSH HOLDER
104	3302246			MOTOR HOUSING
105	3322158			STOPPER
106	4368022			PILLAR TERMINAL
107	3302196			BRACKET
108	7170024			SCREW 8X1 PH.B.
109	3369049			ELECTRONIC STARTING CIRCUIT
110	3319652			RULE LABEL
111	9580068			WASHER D,10,2X17X0,2
112	3326131			SPRING
113	3345389			BLOCKING CABLE
114	2023036			WASHER
115	4322128			HANDLE SCREW
116	2079011			SCREW D.3.6X8 CL89Z
117	3302392			HANDLE LEVER
118	1025104			KNOB M 6X25 mm (CG)
119	7278014			SCREW M.4X8
120	8375075			HEX. SCREW M.8X45
121	4383008			WASHER AET D.8.4
122	3323286			BRACKET
123	3319658			LASER LABEL
124	3321598			GUIDE COLUMN
125	7285022			NUT M.20X1
126	7234015			WASHER
127	8571018			HEX. HD. SCREW M.6X25
128	8478018			SCREW M.4X10

Pos.	Code	Vrs.	Serie	Item
129	1383003			WASHER AET D.6.4
130	3325152			KNOB FOR TABLE ADJUSTMENT
131	3345532			HINGE WITH BUSHINGS
132	6685032			NUT M.5
133	4371011			HEX. HD. SCREW M.5X20
134	4322127			SHAFT
135	2079001			SCREW D.4x20 (TX)
136	6399061			CONTACT FINGER M.8
137	1185003			HEX. NUT M.8
138	4302172			STOPPER
139	3885004			SELF-LOCKING HEX. NUT M.8
140	4371014			HEX. HD. SCREW M.8X60
141	3302371			COVER
142	7278007			SCREW M.4X12 PH.
143	7203045			COVER
144	3306271			DISC
145	3321600			SCREW
146	3321602			STOPPER
147	3325151			KNOB M6X52
148	3345341			BRAKE DRUM
149	3319252			LABEL
*149	- 3319332			LABEL (WURTH)
150	3319251			LABEL
*150	- 3319331			LABEL (WURTH)
151	4312040			CENTERING COLLAR
152	3833085			WASHER D.8X25X3
153	1675036			HEX. SOCKET SET SCREW M.8X30
154	3302191			FIXED PROTECTION (RIGHT)
154	- 3302672			RIGHT FIXED PROTECTOR
155	3302829	A0		RIGHT PROTECTOR
155	- 3302812			LEFT PROTECTOR
*155	- 3302671			FIXED LEFT PROTECTOR
156	3323278			PLATE
157	3323279			SAFETY STOPPER
158	3306272			HINGE SUPPORT
159	4371005			HEX. HD. SCREW M.5X30
160	3323508			SLIDING PLATE
161	7070022			PAN HD. TAPPING SCREW 6X1/2 PH.BZ.
162	9075002			HEX. SOCKET HD. CAP SCREW M.8X30
163	3306270			BASE
164	3380045			WASHER
165	3399115			COVER
166	2404188			BUSHING D.22
167	7234010			WASHER
168	9022006			GUIDE ROD
169	1171001			HEX. HD. SCREW M.8X70
170	3385030			NUT
171	3346464			UPPER PROTECTOR
172	3488090			WASHER
173	3302372			STOPPER
174	5083027			WASHER D.10
175	3306167			UPPER PROTECTION
176	3302218			COVER
177	3369048			SWITCH
178	5604228			JOINT 5X1.5X8
179	3345152			UPPER PROTECTOR
180	3323177			BRACKET
181	3306173			BRAKE BOX
182	7202245			CLIP
183	6673010			FLAT HD. SCREW M.5X8 PH.
184	6478002			SCREW M.4X12 PH.
185	3346190			STOPPER ASS'Y
186	3306651			HINGE
186	- 3306653			HINGE
187	3302244			LOWER PROTECTION (LEFT)
188	3302243			LOWER PROTECTION (RIGHT)
189	3319177			LABEL
190	3302253			SCREW COVER
191	3302393			PAWL
192	3302394			HANDLE PUSH BUTTON
193	3325153			KNOB M8X57
194	3326224			SPRING
195	9502649			LEVER
196	4302300			PUSHER
197	4302365			HOLDER
198	3368257			FUSE 10 A. T-26
199	3326148			SWITCH HOLDER
200	3304214			SWITCH PROTECTION
201	3346452			TABLE ASS'Y
202	3326133			SPRING
203	3323302			HANDLE SUPPORT
204	3396345			LABEL
205	4380012			WASHER D.6.4 DIN125
206	3326144			SPRING
207	3368255			FUSE HOLDER
208	3326145			SPRING
209	3321266			SHAFT
210	7070023			FLAT HD. TAPPING SCREW 6X1/2 PH.BZ.
211	3323354			SLIDE
212	6375052			HEX. SOCKET SET SCREW M.6X8
213	3345496			LEVER ASS'Y
214	3346461			RIGHT PROTECTOR HOLDER ASS'Y
215	6723384			CLAMP
216	8678008			SCREW M.4X10 PH.
217	9502443			WIRE PROTECTOR
218	3346462			LEFT PROTECTOR HOLDER ASS'Y
219	3346493			BLADE FLANGE W/LASER
220	3380079			WASHER 10X18X3
221	3385065			NUT M8X1
222	3387159			RACK PINION
223	9580005			WASHER D.10.2X20X0.26
224	3399678			COVER
225	3302834			REAR COVER
S/P	3394542			CARTON BOX

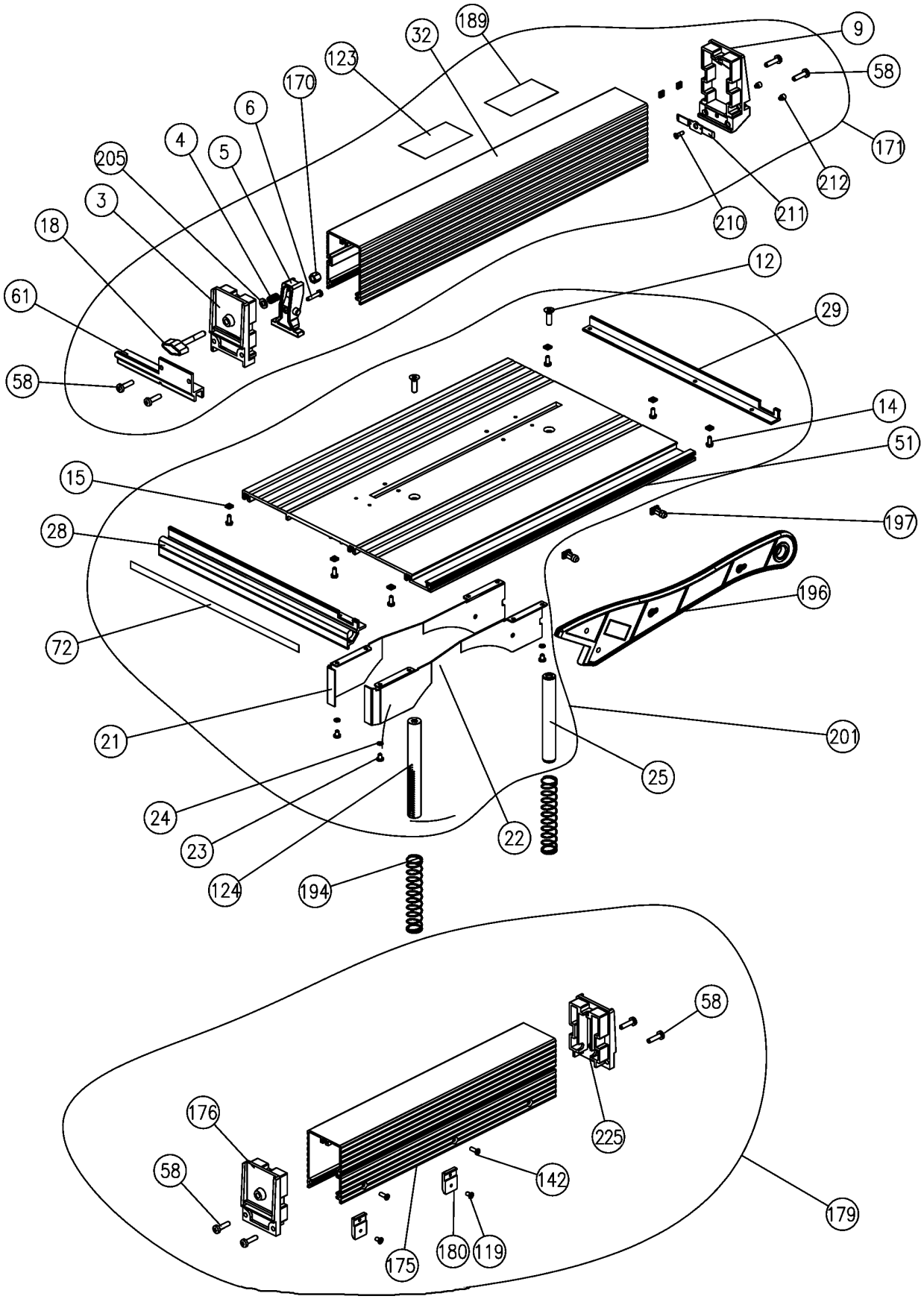
189
32
9
123
58
170
6
171
4
5
205
212
3
211
210
18
12
61
29
58
14
51
15
197
28
196
72
201
21
25
24
23
22
124
194
58
176
225
58
142
179
175
180
119

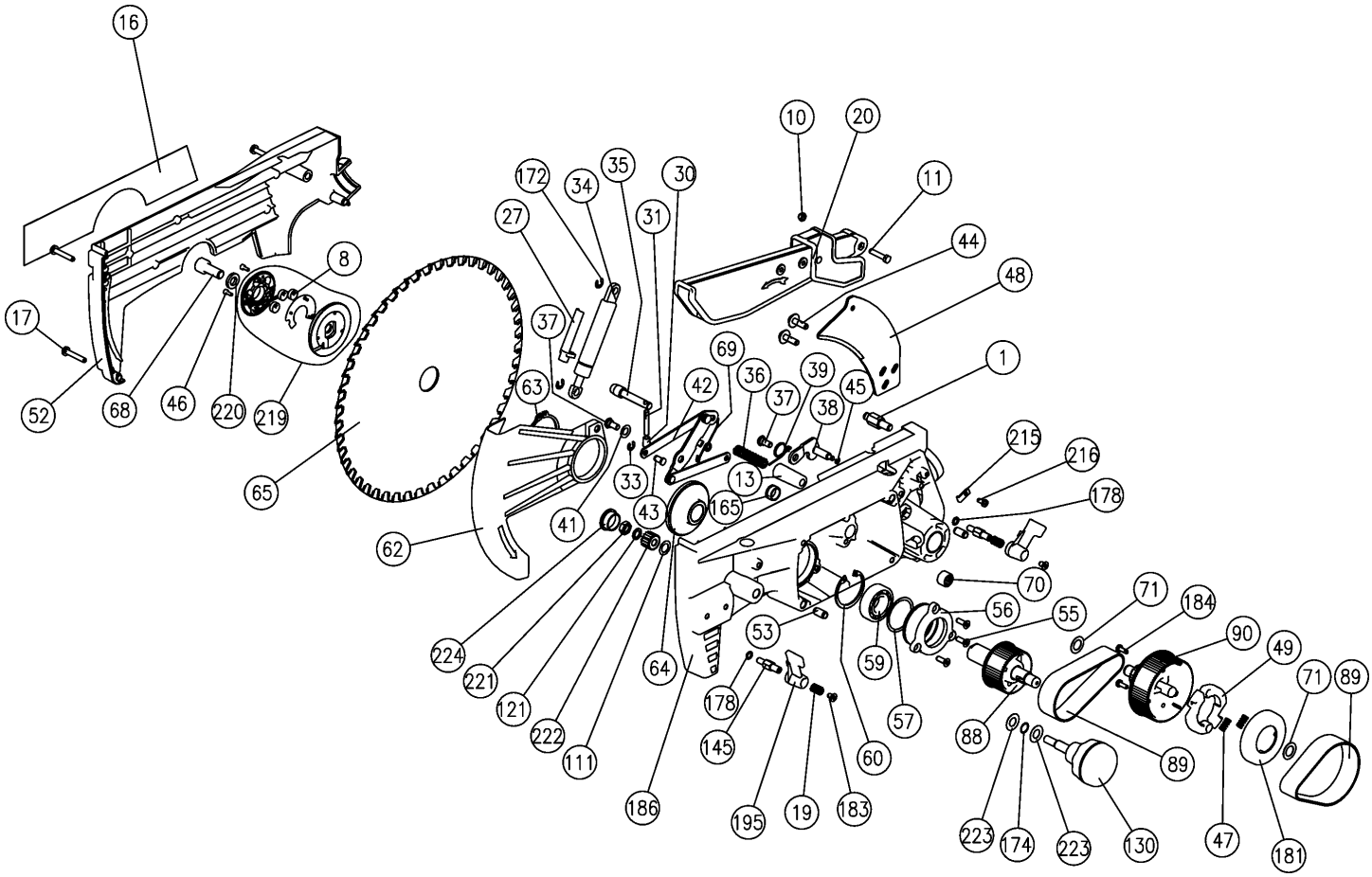
16
10
20
11
172
34
35
30
31
27
44
48
8
17
37
69
36
39
1
63
42
37
38
45
52
68
46
220
219
215
216
65
33
13
178
41
43
165
62
70
71
184
56
55
90
49
224
53
59
71
89
221
64
178
57
121
222
145
60
88
89
111
186
195
19
183
223
174
223
130
47
181

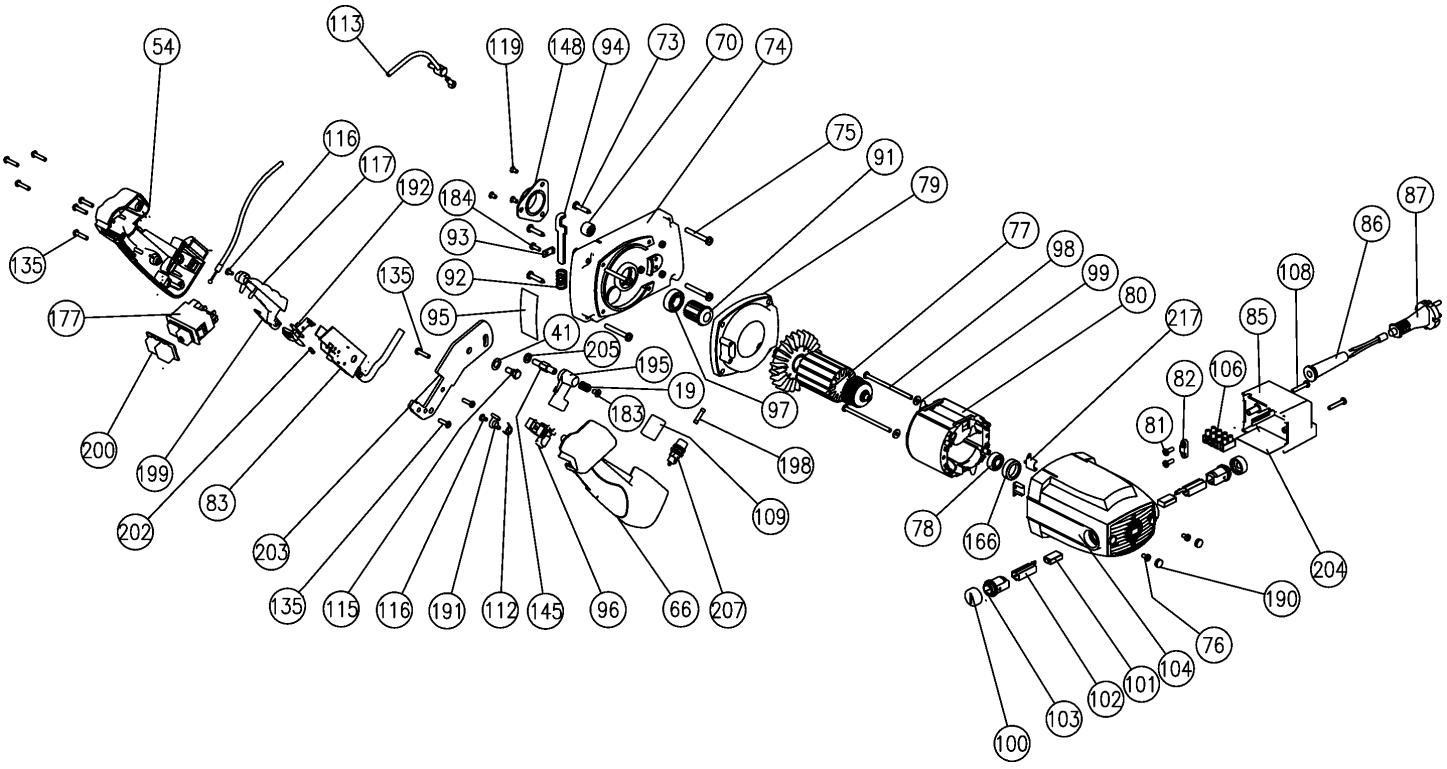
113
54
119
148
94
73
70
74
116
117
192
184
75
91
79
87
86
135
93
92
135
77
98
99
80
108
177
95
41
205
195
19
217
85
82
106
97
183
81
200
199
83
198
109
78
166
202
203
204
190
135
115
116
191
112
145
96
66
207
76
104
101
102
103
100

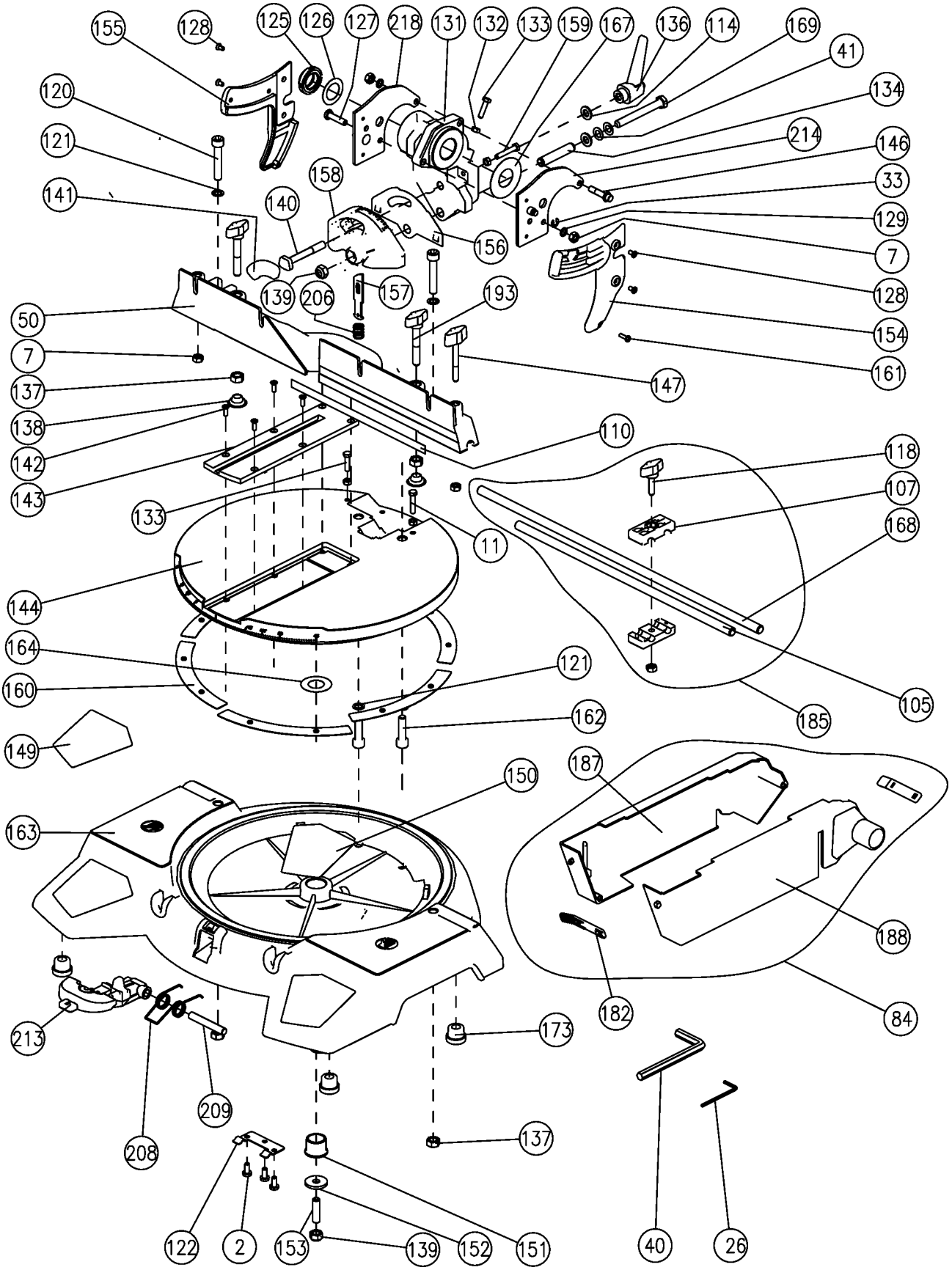
155
128
125
126
127
218
131
132
133
159
167
136
114
169
41
134
214
146
33
129
7
128
154
161
120
121
141
158
140
139
206
157
156
193
147
50
7
137
138
142
143
133
110
11
118
107
168
105
185
144
164
160
121
162
149
150
163
187
188
182
84
213
209
208
173
137
122
2
153
139
152
151
40
26
7